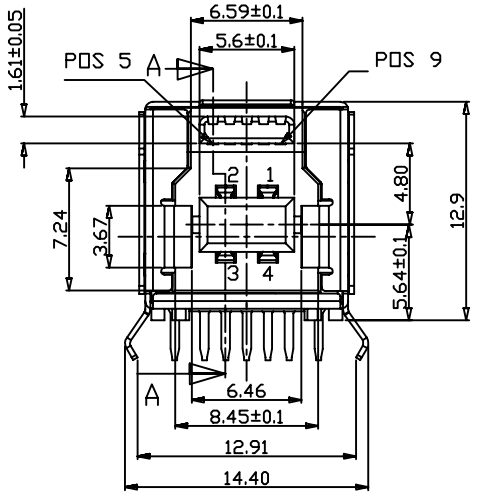

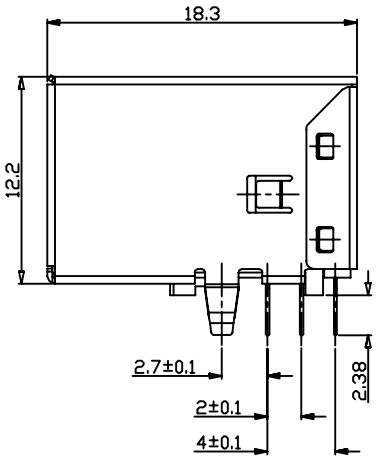

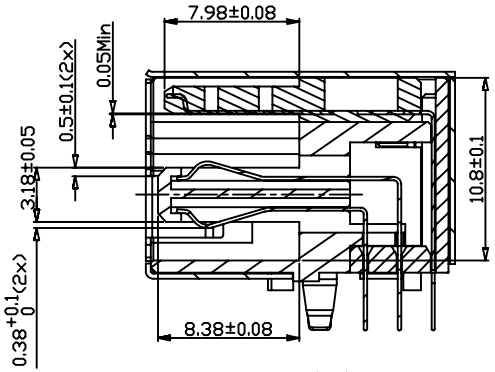

SECTION A-A

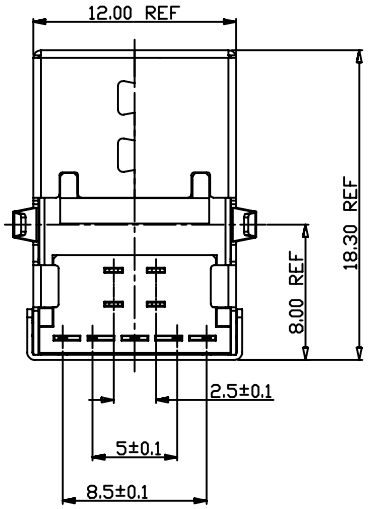

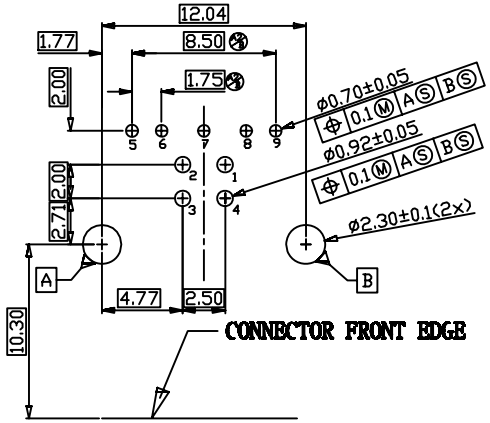

RECOMMANDED PCBA LAYOUT

NOTES:

1. MATERIAL:
   1.1 HOUSING: LCP UL94V-0 BLUE
   1.2 CONTACT: 1~4PIN,COPPER(T=0.20mm)
   5~9PIN,BRASS(T=0.20mm)
   1.3 SHELL: FRONT SHELL,BRASS(T=0.30mm)
   COVER SHELL,SPCC(T=0.20mm)
2. ELECTRICAL CHARACTERISTICS:
   2.1 CONTACT RESISTANCE:30mΩ MAX.
   2.2 CONTACT CURRENT RATING:1.5A
   2.3 DIELECTRIC WITHSTANDING VOLTAGE:500 V R.M.S.
   2.4 INSULATION RESISTANCE 1000 MEGOHMS MIN.
   2.5 OPERATING TEMPEROTURE:-40°C~85°C
3. MECHANICAL CHARACTERISTICS:
   3.1 MATING FORCE:3.57kg MAX.
   3.2 UNMATING FORCE:1.02kg MIN.
   3.3 DURABILITY:MANDATORY:5000 CYCLES.
4. PLATING
   4.1 TERMINAL:GOLD FLASH ALL OVER U"MIN.
   NICKEL AND 1U"MIN TIN ALL OVER U"MIN.
   NICKEL ON SOLDER AREA
   4.2 SHELL: U" MIN.NICEL OVER U"MIN BRASS.

TOLERANCE UNLESS OTHERWISE SPECIFIED	产品名称 PART NAME:	USB BF 3.0 DIP	
.XXX ±0.15 .XX ±0.30 .X ±0.45 .X° ±3°	料号 PART No:		C

REV:	DESCRIPTION	REV BY	APPROVED	DATE	MATL:	SEE SPECIFICATION			APPROVED	
					PROJECTION:	THIRD ANGLE PROJECTION			CHECKED	
					UNIT:	SCALE	REV(NO)	SHEET	DRAWED	Hexing
					mm	1:1	A	1 OF 1	DATE	2011.10.06